HOSPITALITY KITCHEN MAPS

Culinary and Pastry courses take place in the O and U buildings. To find out your room number, log into your MyNAIT Portal at www.nait.ca/mynait or phone 780.471.6248. Note: Parking in D Lot located on 118 Avenue and 107 Street.

THE HOKANSON CENTRE FOR CULINARY ARTS IN BUILDING U

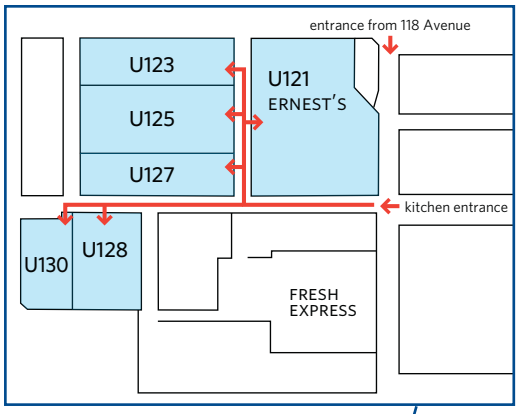

CENTRAL BUILDING - BUILDING O

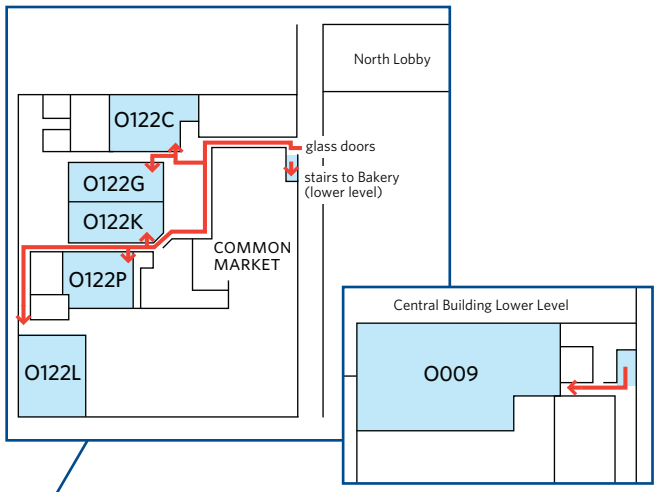
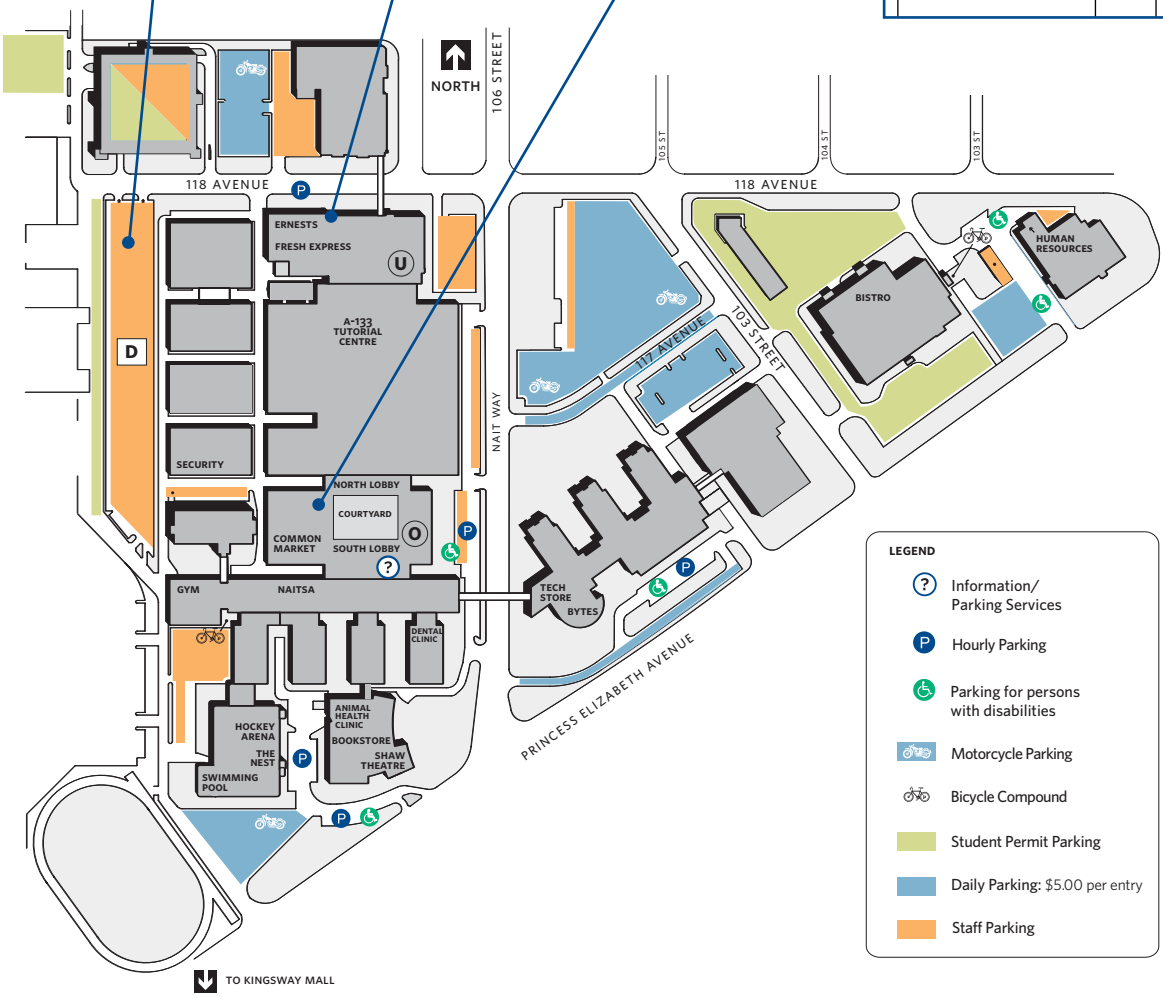
PARKING - D LOT